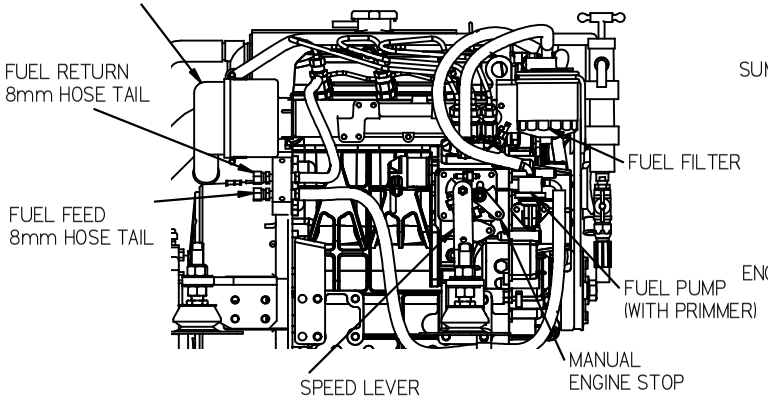

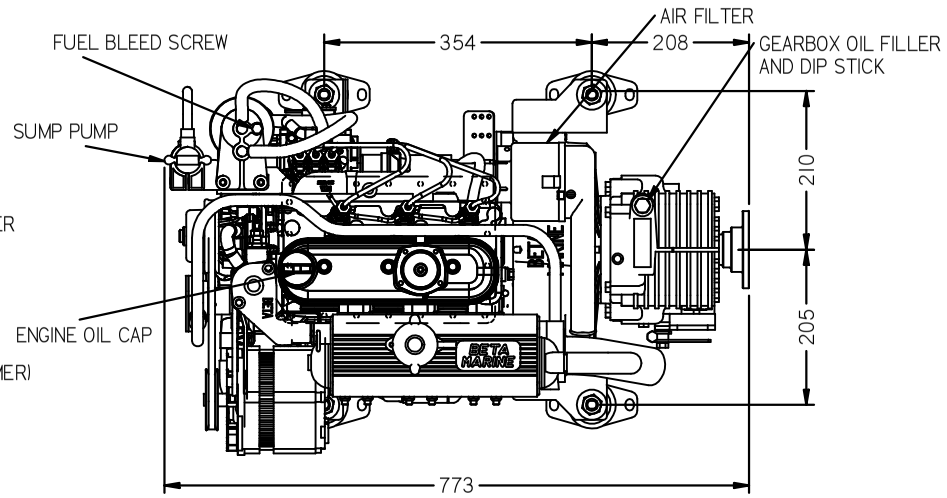

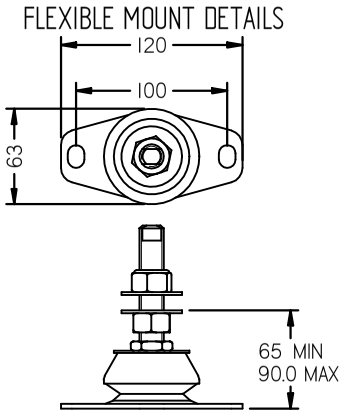

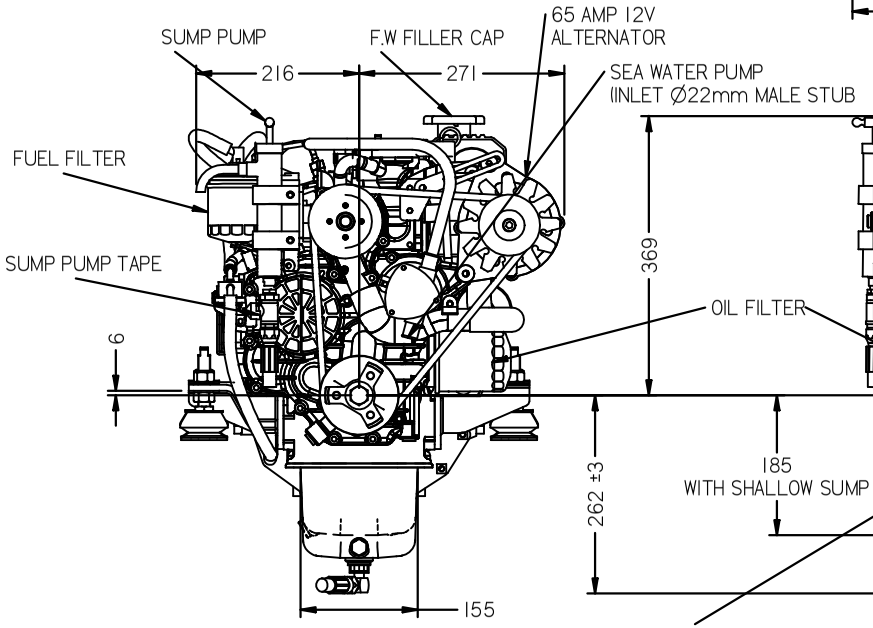

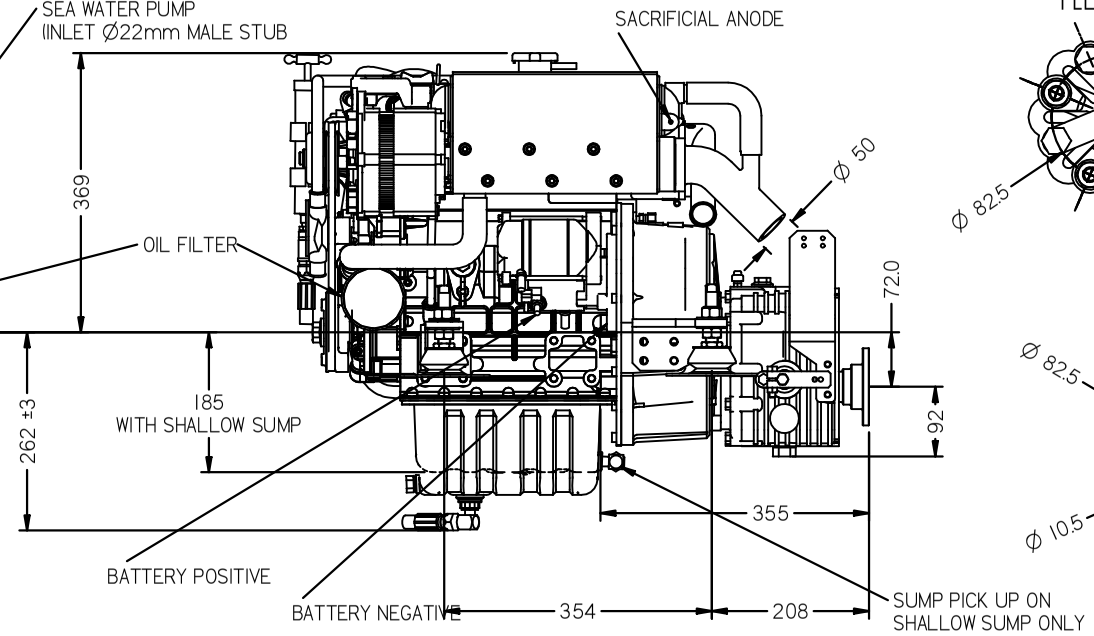

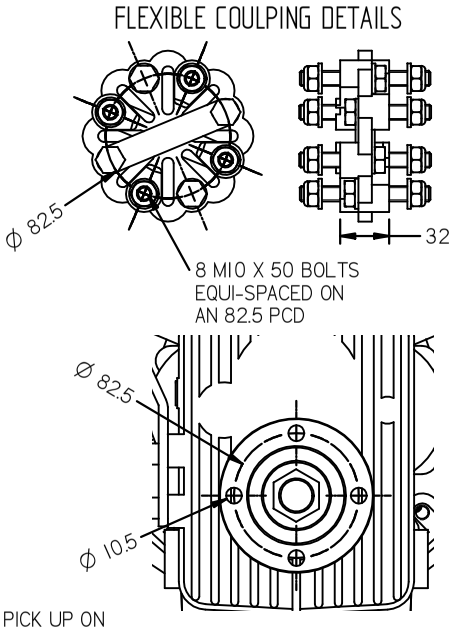

REV	DESCRIPTION	DATE	APP'D	DRAWN
01				

NOTES

TITLE:

BETA28-30 HEAT EXCHANGE PRM 80 GEARBOX

DIMENSIONS IN MM (INCH)
DO NOT SCALE

PART FILE NAME: 100-99550 BETA28 (BD1005) HE PRM80.asm

BETA MARINE
TEL: (01452) 723492 FAX: (01452) 729916
BETA MARINE LTD,
DAVY WAY,
WATERWELLS,
QUEDGELEY,
GLOUCESTER. GL2 2AD, UK

DRAWN BY:	SIZE	DWG NO:	REV
TW	A4	100-99550	03
CHECKED BY: LT	SCALE NTS	PAGE 1 of 1	DATE 12/08/2009