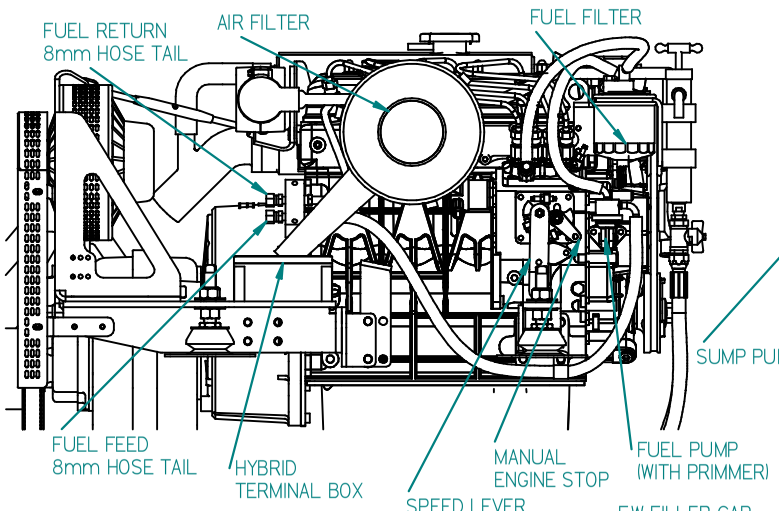


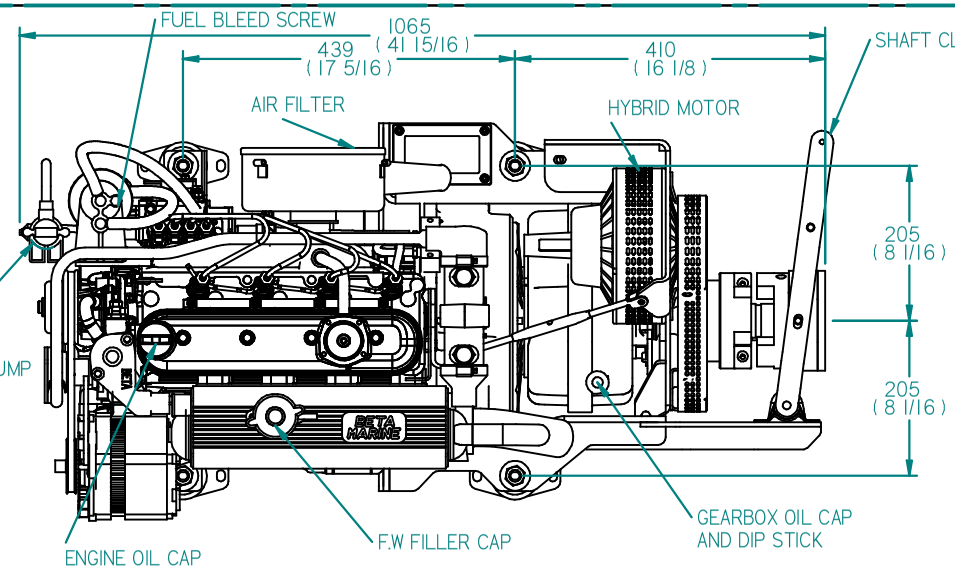


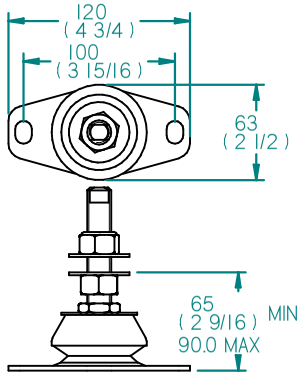


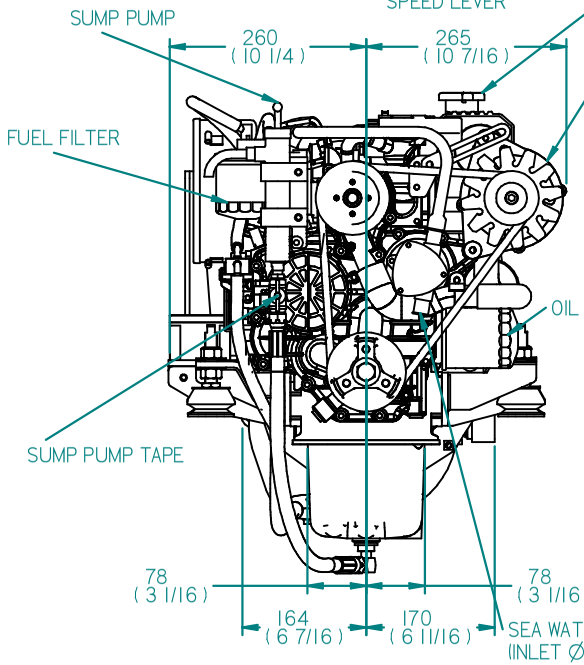


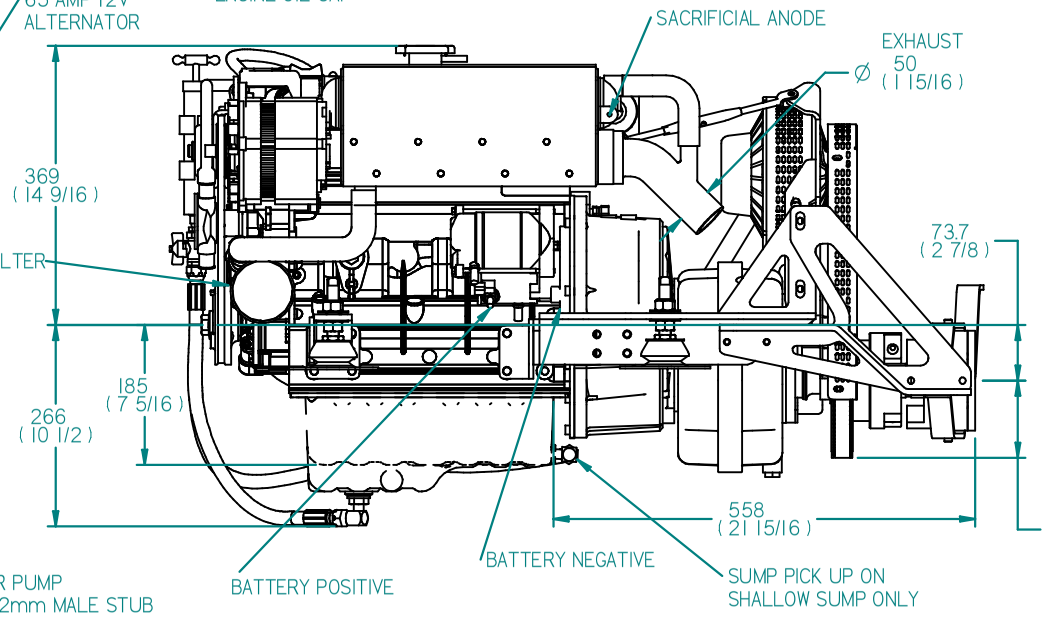


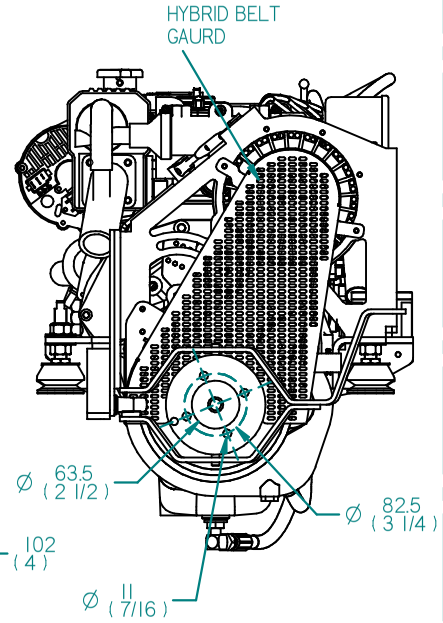


| REV | DESCRIPTION | DATE | APP'D | DRAWN |
|---|---|---|---|---|
| 01 | | | | |

NOTES

TITLE:

# BETA 38 HYBRID DRIVE HEAT EXCHANGE

DIMENSIONS IN MM (INCH)
DO NOT SCALE

PART FILE NAME: BETA38 HE HYBRID DRIVE.asm

BETA MARINE
TEL: (01452) 723492 FAX: (01452) 729916
BETA MARINE LTD,
DAVY WAY,
WATERWELLS,
QUEDGELEY,
GLOUCESTER. GL2 2AD, UK

| DRAWN BY: | TW | SIZE | A4 | DWG NO: | 100-09004 | REV | 00 |
|---|---|---|---|---|---|---|---|
| CHECKED BY: | LT | SCALE | NTS | PAGE | 1 of 1 | DATE | 16/08/2010 |